Unitrode Products
from Texas Instruments

UC1826
UC2826
UC3826

Secondary Side Average Current Mode Controller

FEATURES

- Practical Secondary Side Control of Isolated Power Supplies
- 1MHz Operation
- Tailored Loop Bandwidth Provides Excellent Noise Immunity
- Voltage Feedforward Provides Superior Transient Response
- Accurate Programmable Maximum Duty Cycle
- Multiple Chips Can be Synchronized to Fastest Oscillator
- Wide Gain Bandwidth Product (70MHz, Acl>10) Current Error Amplifier
- Up to Ten Devices Can Easily Share a Common Load

DESCRIPTION

The UC1826 family of average current mode controllers accurately accomplishes secondary side average current mode control. The secondary side output voltage is regulated by sensing the output voltage and differentially sensing the AC switching current. The sensed output voltage drives a voltage error amplifier. The AC switching current, monitored by a current sense resistor, drives a high bandwidth, low offset current error amplifier. The output of the voltage error amplifier can be used to drive the current amplifier which filters the measured inductor current. Fast transient response is accomplished by utilizing voltage feedforward in generating the PWM ramp.

The UC1826 features load share, oscillator synchronization, undervoltage lockout, and programmable output control. Multiple chip operation can be achieved by connecting up to ten UC1826 chips in parallel. The SHARE bus and CLKSYN bus provide load sharing and synchronization to the fastest oscillator respectively. With its tailored bandwidth, the UC1826 provides excellent noise immunity and is an ideal controller to achieve high power, secondary side average current mode control.

BLOCK DIAGRAM

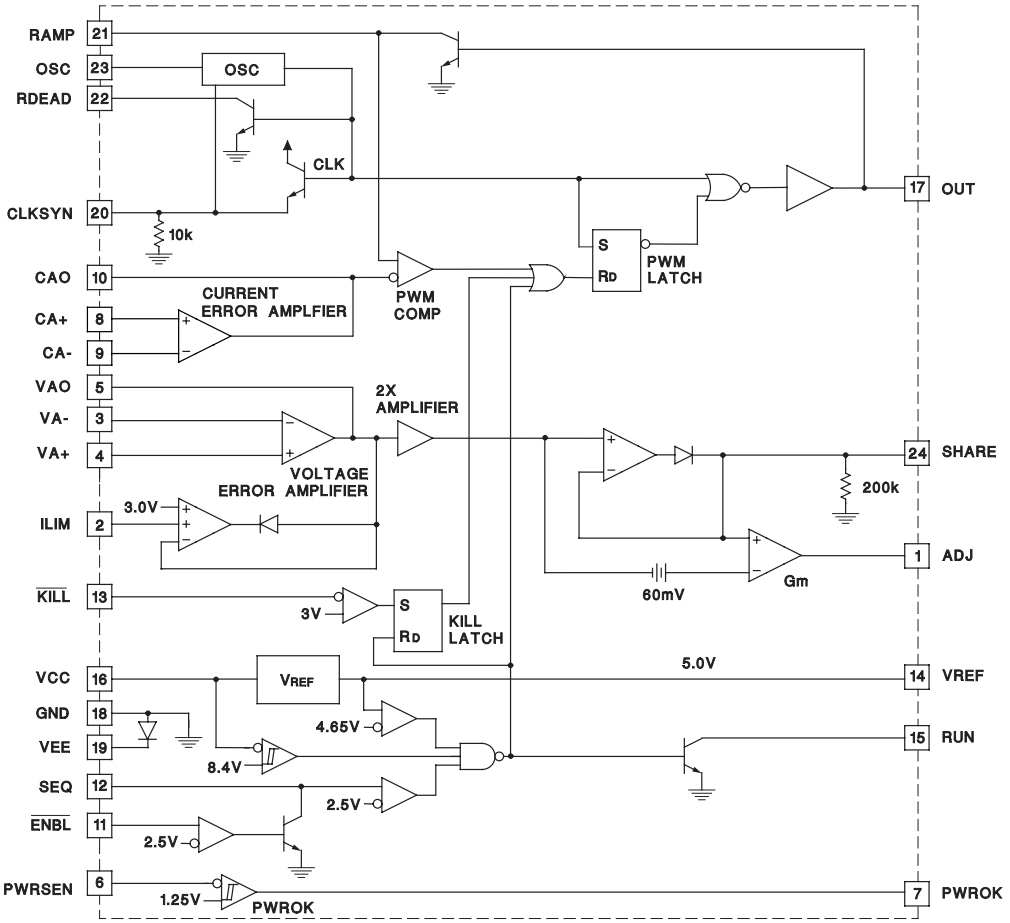

Pin Numbers refer to 24-pin packages.

ABSOLUTE MAXIMUM RATINGS

Supply Voltage (VCC) 20V
Output Current Source or Sink 0.3A
Analog Input Voltages . . . . . –0.3V to 7V
ILIM, KILL, SEQ, ENBL, RUN, PWRSEN, PWROK –0.3V to 7V
CLKSYN Current Source 20mA
RUN Current Sink. 20mA
SEQ Current Sink. 20mA
RDEAD Current Sink 20mA
RAMP Current Sink 20mA
Share Bus Voltage (voltage with respect to GND) . . 0V to 6.2V
ADJ Voltage (voltage with respect to GND) . . . . . 0.9V to 6.3V
VEE (voltage with respect to GND) . . . . . –1.5V

Storage Temperature . . . . . –65°C to +150°C
Junction Temperature. . . . . –65°C to +150°C
Lead Temperature (Soldering, 10 sec.) . . . . . +300°C

All voltages with respect to VEE except where noted; all currents are positive into, negative out of the specified terminal. Consult Packaging Section of Databook for thermal limitations and considerations of packages.

RECOMMENDED OPERATING CONDITIONS

Input Voltage . . . . . 8V to 20V
Sink/Source Output Current 250mA
Timing Resistor R_T . . . . . 1k to 200k
Timing Capacitor C_T . . . . . 75pF to 2nF

CONNECTION DIAGRAMS

DIL-24, SOIC-24 (Top View)
J or N, DW Packages

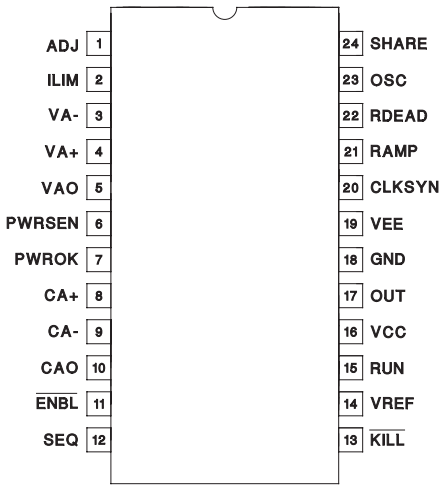

PLCC-28 (Top View)
Q Packages

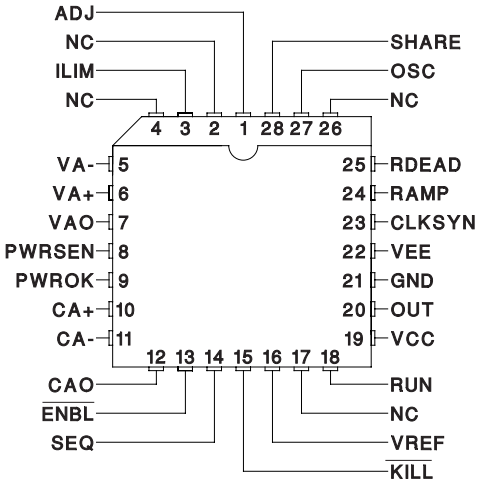

ELECTRICAL CHARACTERISTICS: Unless otherwise stated these specifications apply for T_A = –55°C to +125°C for UC1826; –40°C to +85°C for UC2826; and 0°C to +70°C for UC3826; VCC = 12V, VEE = GND, Output no load, C_T = 345pF, R_T = 4kΩ, RDEAD = 1000Ω, C_{RAMP} = 345pF, R_{RAMP} = 35.2kΩ, R_{CLKSYN} = 1k, $T_A = T_J$.

PARAMETER	TEST CONDITIONS	MIN	TYP	MAX	UNITS
Current Error Amplifier					
Ib			0.5	3	µA
Vio	T_A = +25°C		0.75	3	mV
	Over Temperature			5	mV
Avo		60	90		dB
GBW (Note 2)	Acl = 10, R_{IN} = 1k, CC = 15pF, f = 200kHz (Note 1)	45	70		MHz
Vol	I_O = 1mA, Voltage above VEE		0.5		V
Voh	I_O = 0mA		3.8		V
	I_O = –1mA		3.5		V
Voltage Error Amplifier					
Ib			0.5	3	µA
Vio				5	mV
Avo		60	90		dB

ELECTRICAL CHARACTERISTICS: Unless otherwise stated these specifications apply for T_A = –55°C to +125°C for UC1826; –40°C to +85°C for UC2826; and 0°C to +70°C for UC3826; VCC = 12V, VEE = GND, Output no load, C_T = 345pF, R_T = 4kΩ, RDEAD = 1000Ω, C_{RAMP} = 345pF, R_{RAMP} = 35.2kΩ, R_{CLKSYN} = 1k, $T_A = T_J$.

PARAMETER	TEST CONDITIONS	MIN	TYP	MAX	UNITS
Voltage Error Amplifier (cont.)					
GBW (Note 2)	f = 200kHz		7		MHz
Vol	I_O = 175mA, Volts above VEE			0.6	V
Voh	ILIM = 3V	2.85	3	3.15	V
Voh-ILIM	Tested ILIM = 0.5V, 1.0V, 2.0V	–100		100	mV
2X Amplifier and Share Amplifier					
V offset (b; y = mx + b)				20	mV
GAIN (m; y = mx + b)	Slope with AV_{OUT} = 1V and 2V	1.98		2.02	V
GBW (Note 2)			100		kHZ
R_{SHARE}	VCC = 0, $V_{SHARE/ISHARE}$		200		kΩ
Total Offset	Negative supply is VEE, GND Open,VAO = GND	–75	0	75	mV
Vol	VAO = Voltage Amp Vol, Volts above VEE	0.2	0.45	0.6	V
Voh	I_O = 0mA, ILIM = 3V, VAO = Voltage Amp Voh	5.7	6	6.3	V
	I_O = –1mA, ILIM = 3V, VAO = Voltage Amp Voh	5.7	6	6.3	V
Adjust Amplifier					
Vio		40	60	80	mV
gm	I_O = –2μA to 2μA, C_{ADJ} = 0.1μF		–0.1	–0.3	mS
Vol	I_{OUT} = 0	0.9	1	1.1	v
	I_{OUT} = 2μA	0.85	1	1.15	V
Voh	I_{OUT} = 0, V_{SHARE} = 6.5V	5.7	6	6.3	V
	I_{OUT} = –2μA, V_{SHARE} = 6.5V	5.7	6	6.3	V
Oscillator					
Frequency		450	500	550	kHz
Max Duty Cycle		72	76	80	%
OSC Ramp Amplitude		2	2.2	2.4	V
Ramp Saturation	I_O = 10mA, OSC = 0V		0.44	0.8	V
Clock Driver/SYNC (CLKSYN)					
Vol			0.02	0.2	V
Voh			3.6		V
	R_{CLKSYN} = 200Ω		3.5		V
I_{SOURCE}			25		mA
R_{CLKSYN}	VCC = 0, V_{CLKSYN}/I_{CLKSYN}		10		k
V_{TH}			1.5		V
VREF Comparator					
Turn-on Threshold			4.65		V
Hysteresis			0.4		V
VCC Comparator					
Turn-on Threshold		7.9	8.4	8.9	V
Hysteresis			0.4		V
PWR Sense Comparator					
Voltage Threshold			1.25		V
Vol	I_O = 1mA		0.3	0.4	V
Voh	I_O = –100μA		4		V
$\overline{\text{KILL}}$ Comparator					
Voltage Threshold			3		V

ELECTRICAL CHARACTERISTICS: Unless otherwise stated these specifications apply for T_A = –55°C to +125°C for UC1826; –40°C to +85°C for UC2826; and 0°C to +70°C for UC3826; VCC = 12V, VEE = GND, Output no load, C_T = 345pF, R_T = 4kΩ, RDEAD = 1000Ω, C_{RAMP} = 345pF, R_{RAMP} = 35.2kΩ, R_{CLKSYN} = 1k, $T_A = T_J$.

PARAMETER	TEST CONDITIONS	MIN	TYP	MAX	UNITS
Sequence Comparator					
Voltage Threshold			2.5		V
SEQ SAT	I_O = 10mA		0.25		V
Enable Comparator					
Voltage Threshold			2.5		V
RUN SAT	I_O = 10mA		0.2		V
Reference					
VREF	T_A = 25°C	4.95	5	5.05	V
	VCC = 15V	4.9		5.1	V
Line Regulation	10 < VCC < 20		3	15	mV
Load Regulation	0 < I_O < 10mA		3	15	mV
Short Circuit I	VREF = 0V	30	60	90	mA
Output Stage					
Rise Time	C_L = 100pF		10	20	ns
Fall Time	C_L = 100pF		10	20	ns
Voh	VCC > 11V, I_O =–10mA	8.0	8.	8.8	V
	I_O = –200mA	7.8			V
Vol	I_O = 200mA			3.0	V
	I_O = 10mA			0.5	V
Virtual Ground					
V_{GND}-VEE	VEE is externally supplied, GND is floating and used as Signal GND.	0.2	0.75		V
Icc					
Icc (run)			21	30	mA

Note 1: Ensured by design. not 100% tested in production.
Note 2: Unless otherwise specified all voltages are with respect to GND. Currents are positive into, negative out of the specified terminal.

PIN DESCRIPTIONS

ADJ: The output of the transconductance (gm = –0.1mS) amplifier adjusts the control voltage to maintain equal current sharing. The chip sensing the highest output current will have its output clamped to 1V. A resistor divider between VREF and ADJ drives the control voltage (VA+) for the voltage amplifier. Each slave unit's ADJ voltage increases (to a maximum of 6V) its control voltage (VA+) until its load current is equal to the master. The 60mV input offset on the gm amplifier ensures that the unit sensing the highest load current is chosen as the master. The 60mV offset is ensured by design to be greater than the inherent offset of the gm amplifier and the buffer amplifier. While the 60mV offset represents an error in current sharing, the gain of the current and 2X amplifiers reduces it to only 30mV. The total current sense gain is the current amplifier gain. This pin needs a 0.1μF capacitor to compensate the amplifier.

CA–, CA+: The inverting and non-inverting inputs to the current error amplifier. This amplifier needs a capacitor between CA– and CAO to set its dominant pole.

CAO: The output of the current error amplifier which is internally clamped to 4V. It is internally connected to the inverting input of the PWM comparator.

CLKSYN: The clock and synchronization pin for the oscillator. This is a bidirectional pin that can be used to synchronize several chips to the fastest oscillator. Its input synchronization threshold is 1.4V. The CLKSYN voltage is 3.6V when the oscillator capacitor C_T is being discharged, otherwise it is 0V.

PIN DESCRIPTIONS (cont.)

ENBL: The active low input with a 2.5V threshold enables the output to switch. SEQ and RUN are driven low when ENBL is above its 2.5V threshold.

GND: The signal ground used for the voltage sense amplifier, current error amplifier, current error amplifier, voltage reference, 2X amplifier, and share amplifier. The output sink transistor is wired directly to this pin.

KILL: The active low input with a 3.0V threshold stops the output from switching. Once this function is activated RUN must be cycled low by driving KILL above 3.0V and either resetting the power to the chip (VCC) or resetting the ENBL signal.

ILIM: A voltage on this pin programs the voltage error amplifier's Voh clamp. The voltage error amplifier output represents the average output current. The Voh clamp consequently limits the output current. If ILIM is tied to VREF, it defaults to 3.0V. A voltage less than 3.0V connected to ILIM clamps the voltage error amplifier at this voltage and consequently limits the maximum output current.

OSC: The oscillator ramp (not to be confused with PWM ramp) pin has a capacitor C_T to ground and two resistors in series R_T and R_{DEAD} to VREF. The total resistance of R_T and R_{DEAD} divided by VREF – V_{OSC} sets exponential charge current. The oscillator charges from 1.2V to 3.4V until the output transitions low. At this time an open collector transistor is turned on and discharges the C_T capacitor through RDEAD.

The charge time is approximately $T_{CHARGE} = 2(R_T + R_{DEAD}) \bullet C_T$ when the R_{DEAD} resistor is used.

The dead time is approximately $T_{DISCHARGE} = 2 \bullet R_{DEAD} \bullet C_T$.

$$(1)\quad Frequency \approx \frac{1}{T_{CHARGE} + T_{DISCHARGE}}$$

$$(2)\quad Maximum\,Duty\,Cycle \approx \frac{T_{CHARGE}}{T_{CHARGE} + T_{DISCHARGE}}$$

The C_T capacitance should be increased by approximately 40pF to account for parasitic capacitance.

OUT: The output of the PWM driver. It has an upper clamp of 8.5V. The peak current sink and source are 250mA. All UVLO, SEQ, ENBL, and KILL logic either enable or disable the output driver.

PWRSEN: This pin is the input to the PWROK comparator.

PWROK: The output pin from the PWROK comparator. It has a 300μA current source output when driven high.

RAMP: An open collector that can sink 20mA to discharge the oscillator capacitor. An RC is tied between VCC and GND to accomplish feedforward. The PWM output drives this pin. When the output is high, the transistor is off enabling the charging of the RAMP capacitor. When the output transitions low, the transistor is turned on discharging the RAMP capacitor. The voltage at RAMP rises from 0.2V to near 4V at maximum duty cycle. Although this is an exponential ramp at high VCC voltage the ramp appears linear.

RDEAD: The pin that programs the maximum duty cycle by connecting a resistor between it and OSC. The maximum duty cycle is decreased by increasing this resistor value which increases the discharge time. The dead time, the time when the output is low, is $2 \bullet R_{DEAD} \bullet C_T$. The C_T capacitance should be increased by approximately 40pF to account for parasitic capacitance.

RUN: This is an open collector logic output that signifies when the chip is operational. RUN is pulled high to VREF through an external resistor when VCC is greater than 8.4V, VREF is greater than 4.65V, SEQ is greater than 2.5V, and KILL lower than 3.0V. RUN connected to the VA+ pin and to a capacitor to ground adds an RC rise time on the VA+ pin initiating a soft start.

SEQ: The sequence pin allows the sequencing of startup for multiple units. A resistor between VREF and SEQ and a capacitor between SEQ and GND create a unique RC rise time for each unit which sequences the output startup.

SHARE: The nearly DC voltage representing the average output current. This pin is wired directly to all SHARE pins and is the load share bus.

VA–, VA+: The inverting and non-inverting inputs to the voltage error amplifier.

VAO: The output of the voltage error amplifier. Its Voh is clamped with the ILIM pin.

VCC: The input voltage to the chip. The chip is operational between 8.4V and 20V.

VEE: The negative supply voltage to the chip which powers the lower voltage rail for all amplifiers. The chip is operational if VEE is connected to GND or if GND is floating. When voltage is applied externally to VEE, GND becomes a virtual ground because of an internal diode between VEE and GND. The GND current flows through the forward biased diode and out VEE. GND is always the signal ground from which the voltage reference and all amplifier inputs are referenced.

VREF: The reference voltage equal to 5.0V.

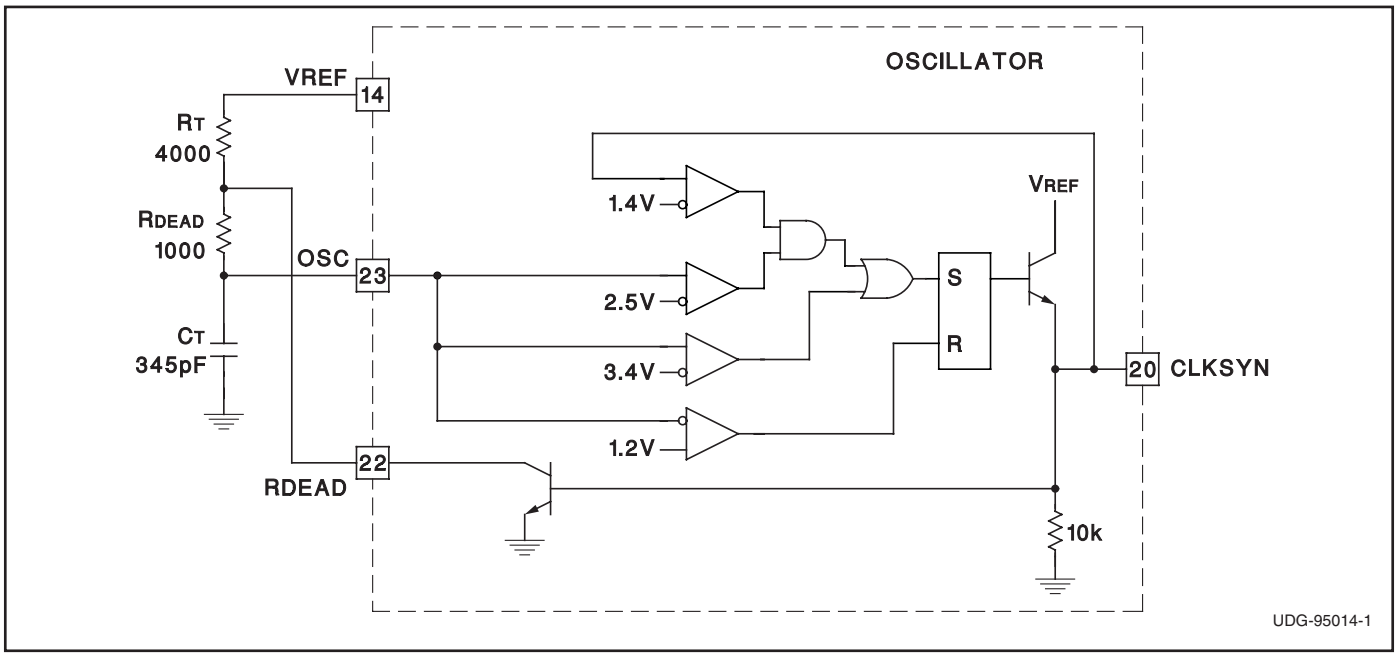

Figure 1. Oscillator Block with External Connections

CIRCUIT DESCRIPTION:

PWM Oscillator: The chip has two pins that set RC time constants. The resistor and capacitor tied to RAMP create the ramp used as the input to the PWM comparator. When the output pin OUT is high, RAMP charges until it passes the PWM comparator threshold. The output is then driven low and RAMP is discharged. The resistors and capacitor on the OSC pin are used to set the PWM operating frequency and its maximum duty cycle.

The oscillator block diagram with external wiring is shown in Figure 1. OSC has a capacitor (C_T) to ground and two resistors in series (R_T and R_{DEAD}) to VREF. The total resistance of R_T and R_{DEAD} divided by VREF - V_{OSC} sets the exponential charge current. The oscillator charges from 1.2V to a 3.4V threshold with an RC time delay of 2 • C_T • (R_{DEAD} + R_T). After exceeding this threshold, the RS flip-flop is set driving CLKSYN high and RDEAD low which discharges C_T. At this time an open collector transistor is turned on and discharges C_T capacitor through RDEAD with a RC time delay of 2 • C_T • R_{DEAD}. The oscillator and ramp waveforms are shown in Figure 2. Equations to attain frequency and maximum duty cycle are listed under the OSC pin description.

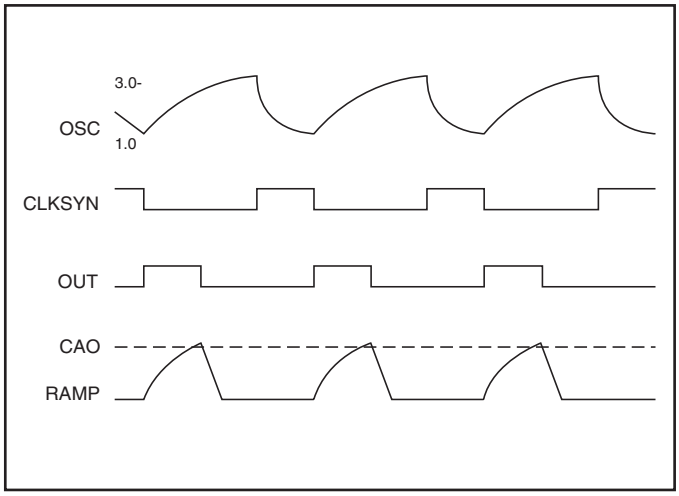

Figure 2. Oscillator and PWM Output Waveform

As shown in Figure 3, several oscillators are synchronized to the highest free running frequency by connecting 100pF capacitors in series with each CLKSYN pin and connecting the other side of the capacitors together forming the CLKSYN bus. The CLKSYN bus is then pulled down to ground with a resistance of approximately 10k. Referring to Figure 1, the synchronization threshold is 1.4V. The oscillator blanks any synchronization pulse that occurs when OSC is below 2.5V. This allows units, once they discharge below 2.5V, to continue through the current discharge and subsequent charge cycles whether or not other units on the CLKSYN bus are still synchronizing. This requires the frequency of all free running oscillators to be within 40% of each other to guarantee synchronization.

Grounds, Voltage Sensing and Current Sensing: The voltage is sensed directly at the load. Proper load sharing requires the same sensed voltage for each power supply connected in parallel. Referring to Figure 4, the

CIRCUIT BLOCK DESCRIPTION (cont.)

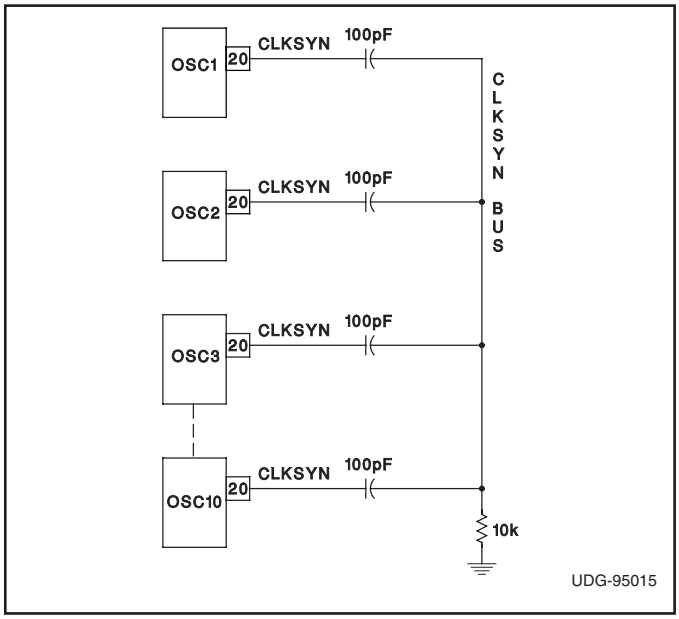

Figure 3. Oscillator Synchronization Connection Diagram

positive sense voltage (VSP) connects to the voltage error amplifier inverting terminal (VA–), the return lead for the on-chip reference is used as the negative sense (VSM). The current is sensed across the shunt resistor, R_S. The voltage across the shunt resistor is level shifted up so that the maximum voltage across R_S corresponds to the voltage error amplifier Voh.

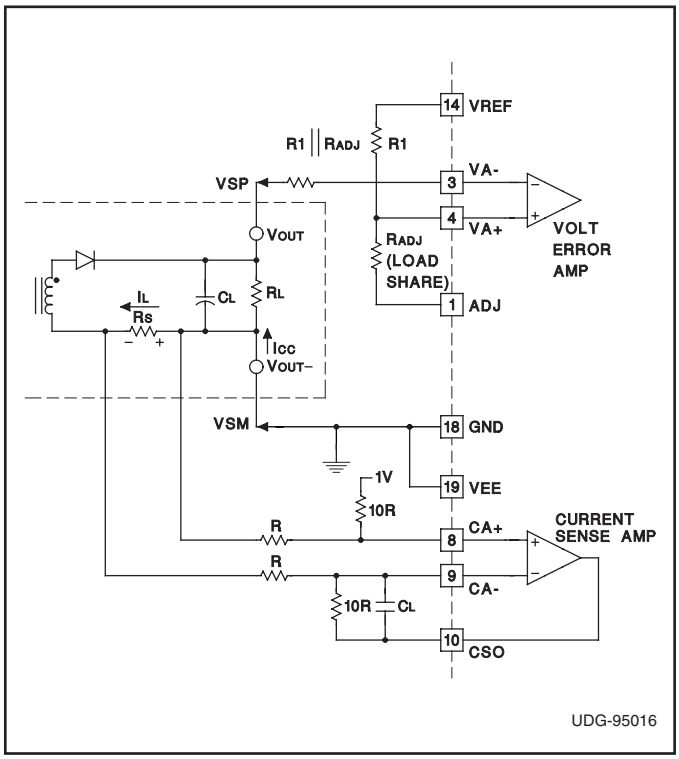

Figure 4. Voltage and Current Sense VEE Tied to GND

Figure 4 shows one recommended voltage and current sensing scheme when VEE is connected to GND. The signal ground is the negative sense point for the output voltage and the positive sense point for the output current. VEE is the negative supply for the current sense amplifier. When it is separated from GND, it extends the current sense amplifier's common mode input voltage range to include VEE which is approximately –0.7V below ground. The resistor R_{ADJ} is used for load sharing. The unit which is the master will force V_{ADJ} to 1.0V. Therefore, the regulated voltage being sensed is actually

$$VSP - VSM = (VREF - V_{ADJ}) \bullet \left(\frac{R_{ADJ}}{R1 + R_{ADJ}} \right) + V_{ADJ}$$

$$VSM = 0V, V_{ADJ} = 1V(master), VREF = 5V$$

$$VSP = 4 \bullet \left(\frac{R_{ADJ}}{R1 + R_{ADJ}} \right) + 1V$$

The voltage at ADJ on the slave chips will increase forcing their load currents to increase to match the master.

The AC frequency response of the voltage error amplifier is shown in Figure 5.

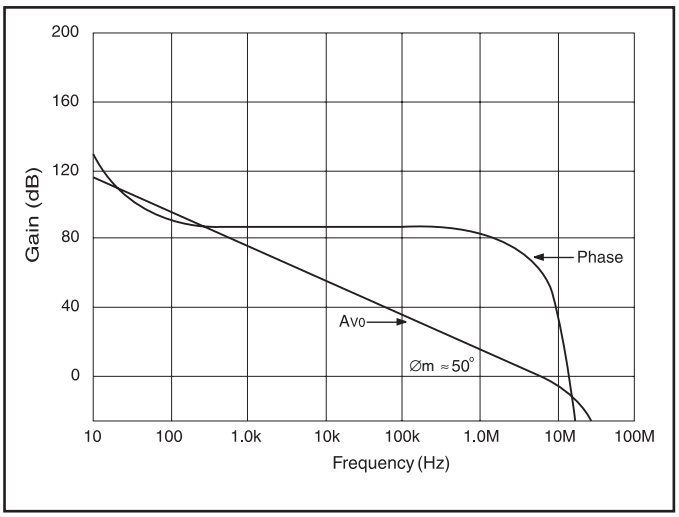

Figure 5. AC Frequency Response of the Voltage Error Amplifier

Startup and Shutdown: Isolated power up can be accomplished using the UCC1889. Application Note U-149 is available for additional information.

The UC1826 offers several features that enhance startup and shutdown. Soft start is accomplished by connecting RUN to VA+ and a capacitor to ground. The resulting RC rise time on the VA+ pin initiates a soft start. It can also be accomplished by connecting RUN to ILIM. When RUN is low it will command zero load current, guaranteeing a soft start. The undervoltage lockout (UVLO) is a logical AND of $\overline{ENBL}$ < 2.5V, SEQ > 2.5V, VCC > 8.4V and

CIRCUIT BLOCK DESCRIPTION (cont.)

VREF > 4.65V. The block diagram shows that the thresholds are set by comparators. By placing an RC divider on the SEQ pin, the enabling of multiple chips can be sequenced with different RC time constants. Similarly, different RC time constants on the $\overline{ENBL}$ pins can sequence shutdown. The UVLO keeps the output from switching; however the internal reference starts up with VCC less than 8.4V. The $\overline{KILL}$ input shuts down the switching of the chip. This can be used in conjunction with an overvoltage comparator for overvoltage protection. In order to restart the chip after $\overline{KILL}$ has been initiated, the chip must be powered down and then back up. A pulse on the $\overline{ENBL}$ pin also accomplishes this without actually removing voltage to the VCC pin.

Load Sharing: Load sharing is accomplished similarly to the UC1907 except it has the added constraint of using the sensed current for average current mode control. The sensed current for the UC1826 has an AC component that is amplified and then averaged. The voltage error amplifier represents this average current. The voltage error amplifier output is the current command signal and its voltage represents the average output load current. The ILIM pin programs the upper clamp voltage of this amplifier and consequently the maximum load current. A gain of 2 amplifier connected between the voltage error amplifier output and the share amplifier input increases the current share resolution and noise margin. The average current is used as an input to a source only load share buffer amplifier. The output of this amplifier is the current share bus. The IC with the highest sensed current will have the highest voltage on the current share bus and consequently act as the master. The 60mV input offset guarantees that the unit sensing the highest load current is chosen as the master.

The adjust amplifier is used by the remaining (slave) ICs to adjust their respective references high in order to balance each IC's load current. The master's ADJ pin will be at its 1.0V clamp and connected back to the non-inverting voltage error amplifier input through a high value resistor. This requires the user to initially calculate the control voltage with the ADJ pin at 1.0V.

VREF can be adjusted 150mV to 300mV which compensates for 5% unit to unit reference mismatch and external resistor mismatch. R_{ADJ} will typically be 10 to 30 times larger than R1. This also attenuates the overall variation of the ADJ clamp of 1V ±100mV by a factor of 10 to 30, contributing only a 3mV to 10mV additional delta to VREF. Refer to the UC3907 Application Note U-130 for further information on parallel power supply load sharing.

Current Control Loop: The current error amplifier (CEA) needs its loop compensated externally. The zero crossing can be calculated with Equation 3.

$$(3)\quad Frequency(0dB) = \frac{1}{2\pi R_{INV} \bullet C_{COMP}}$$

R_{INV} is the input resistance at the inverting terminal CA–
C_{COMP} is the capacitance between C_A– and CAO.

Although it is only unity gain stable for a BW of 7MHz, the amplifier is typically configured with a differential gain of at least 10, allowing the amplifier to operate with sufficient phase margin at a GBW of 70MHz. A closed loop gain of 10 attenuates the output by 20.8dB

$$20.8 = 20\log \bullet \frac{1}{11}$$

to the inverting terminal assuring stability. The amplifier's gain fed back into the inverting terminal is less than unity at 7MHz, where the phase margin begins to roll off. See Figure 6 for a typical Bode plot.

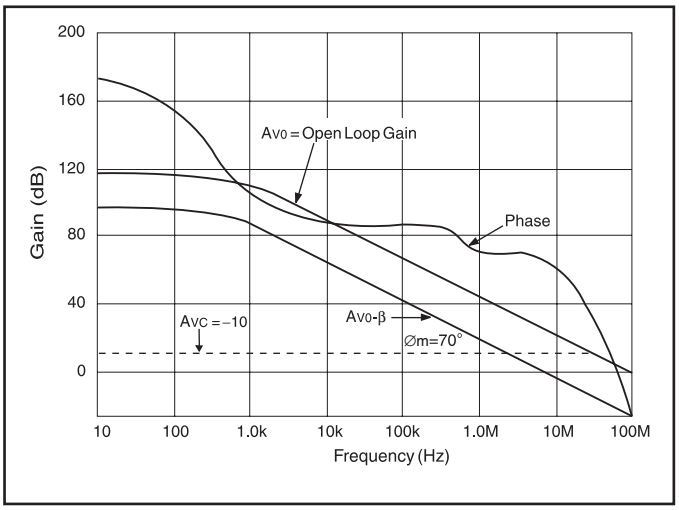

Figure 6. Current Error Amplifier Bode Plot

The current error amplifier bandwidth is rolled off and controlled by the voltage error amplifier output. The maximum load current is limited to approximately the maximum voltage across the shunt resistor (maximum of 200mV) divided by R_S:

$$(4)\quad I_{MAX(LOAD)} = \frac{V_{R(S)}}{R_S}$$

ILIM sets the maximum current limit by setting the Voh clamp on the voltage error amplifier. If ILIM is not set to limit the Voh to be equal to the maximum voltage across R_S, VAO must be attenuated to match the maximum voltage V_{RS} across the shunt resistor. By attenuating the

CIRCUIT BLOCK DESCRIPTION (cont.)

maximum voltage at VAO to be equal to V_{RS}, the current control loop keeps the load from exceeding its current limit. If the ILIM pin is connected to VREF, the Voh is set at 3.0V. The maximum current limit clamp can be reduced by reducing the voltage on ILIM to less than 3.0V as described in the ILIM pin description.

Design Example: Figure 7 is an open loop test that lets the user test the circuit blocks discussed without having to build an entire control loop. The pulse width can be varied by either the V_{ADJ} or the VI_{SENSE} inputs. Figure 8 shows an isolated power supply using the UC1826 secondary side average current mode controller.

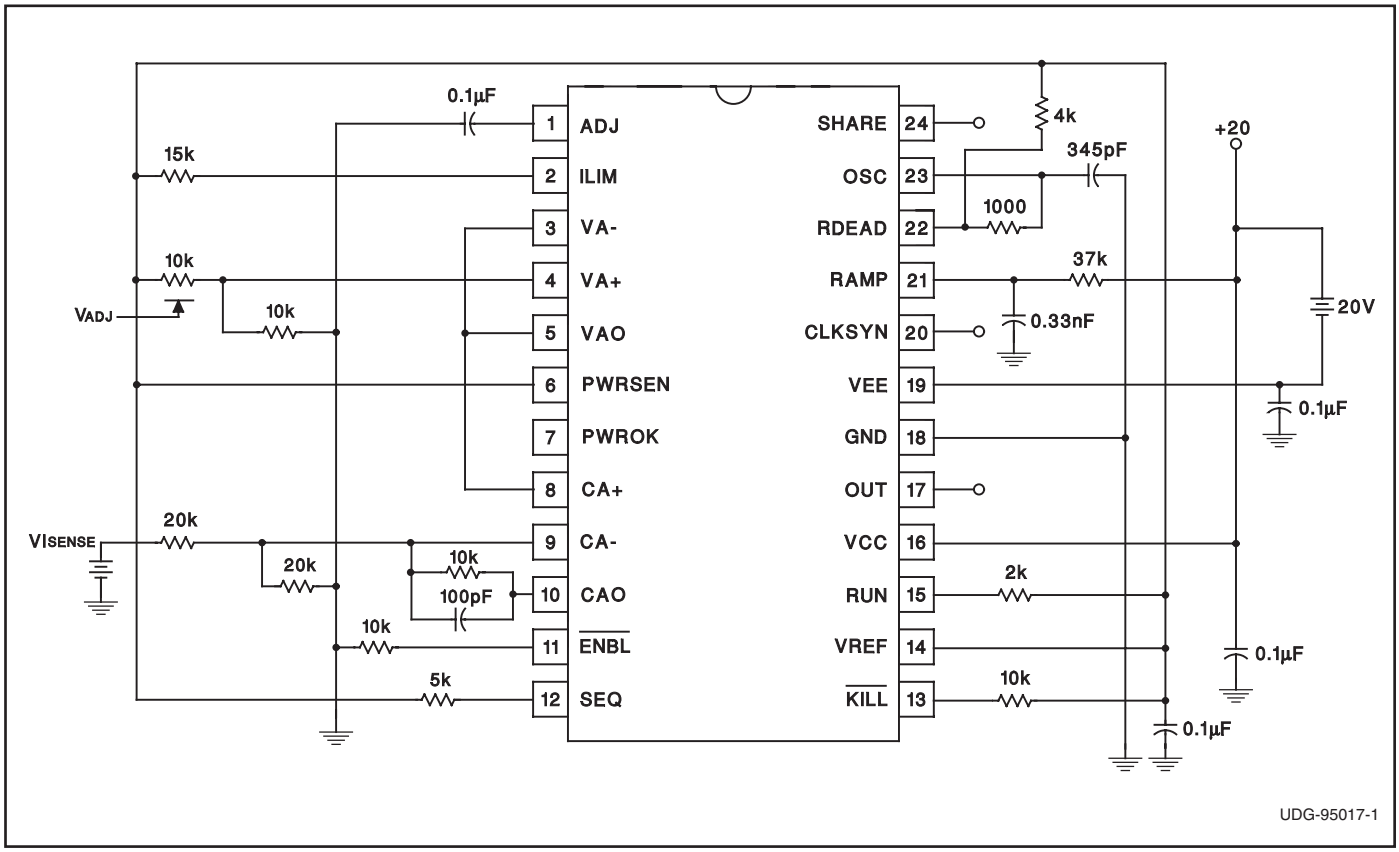

Figure 7. Open Loop Circuit

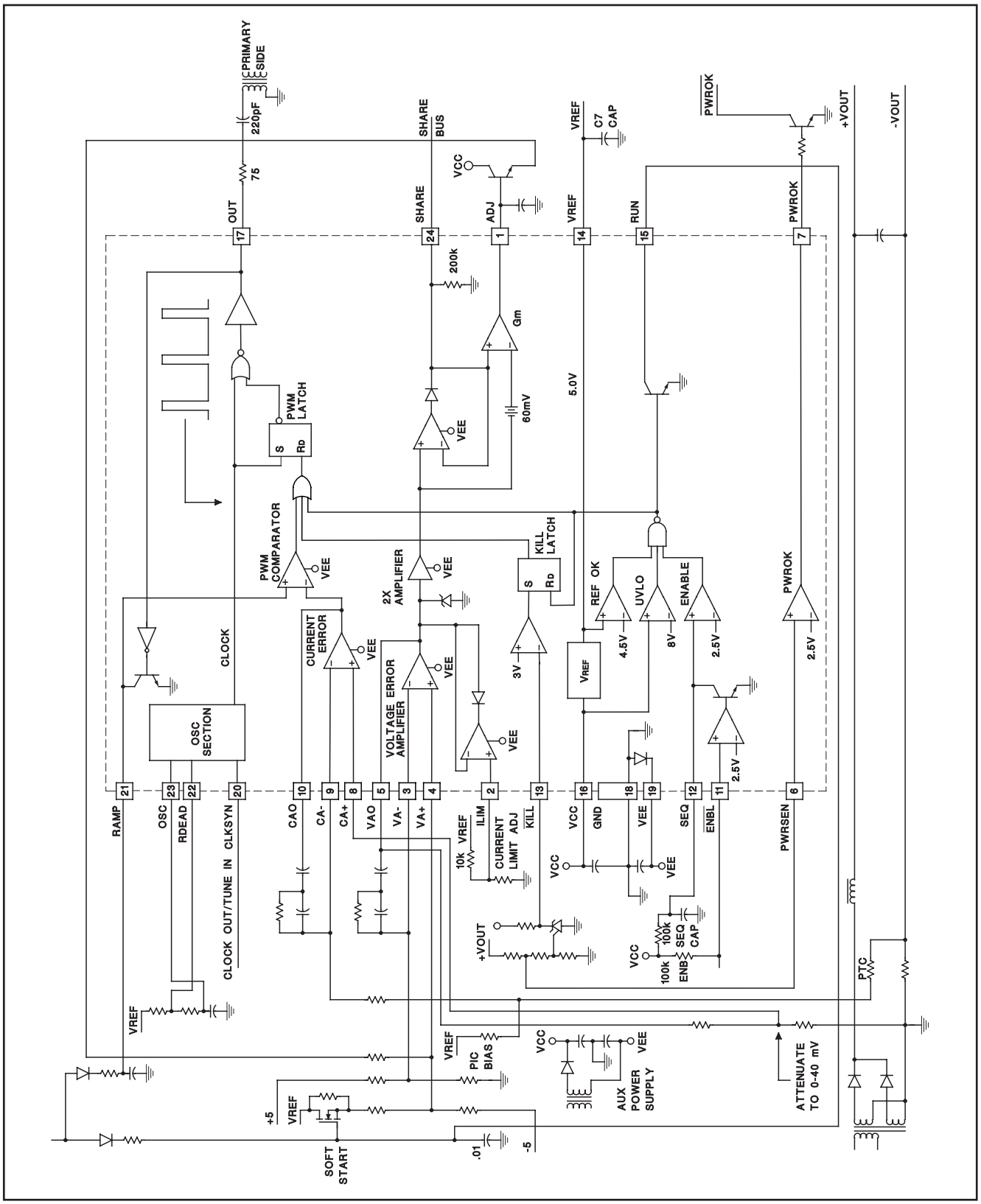

Figure 8. UC1826 Application Diagram

PACKAGING INFORMATION

Orderable Device	Status [1]	Package Type	Package Drawing	Pins	Package Qty	Eco Plan [2]	Lead/Ball Finish	MSL Peak Temp [3]
UC1826J	OBSOLETE	CDIP	J	24		TBD	Call TI	Call TI

[1] The marketing status values are defined as follows:
ACTIVE: Product device recommended for new designs.
LIFEBUY: TI has announced that the device will be discontinued, and a lifetime-buy period is in effect.
NRND: Not recommended for new designs. Device is in production to support existing customers, but TI does not recommend using this part in a new design.
PREVIEW: Device has been announced but is not in production. Samples may or may not be available.
OBSOLETE: TI has discontinued the production of the device.

[2] Eco Plan - The planned eco-friendly classification: Pb-Free (RoHS), Pb-Free (RoHS Exempt), or Green (RoHS & no Sb/Br) - please check http://www.ti.com/productcontent for the latest availability information and additional product content details.
TBD: The Pb-Free/Green conversion plan has not been defined.
Pb-Free (RoHS): TI's terms "Lead-Free" or "Pb-Free" mean semiconductor products that are compatible with the current RoHS requirements for all 6 substances, including the requirement that lead not exceed 0.1% by weight in homogeneous materials. Where designed to be soldered at high temperatures, TI Pb-Free products are suitable for use in specified lead-free processes.
Pb-Free (RoHS Exempt): This component has a RoHS exemption for either 1) lead-based flip-chip solder bumps used between the die and package, or 2) lead-based die adhesive used between the die and leadframe. The component is otherwise considered Pb-Free (RoHS compatible) as defined above.
Green (RoHS & no Sb/Br): TI defines "Green" to mean Pb-Free (RoHS compatible), and free of Bromine (Br) and Antimony (Sb) based flame retardants (Br or Sb do not exceed 0.1% by weight in homogeneous material)

[3] MSL, Peak Temp. -- The Moisture Sensitivity Level rating according to the JEDEC industry standard classifications, and peak solder temperature.

Important Information and Disclaimer: The information provided on this page represents TI's knowledge and belief as of the date that it is provided. TI bases its knowledge and belief on information provided by third parties, and makes no representation or warranty as to the accuracy of such information. Efforts are underway to better integrate information from third parties. TI has taken and continues to take reasonable steps to provide representative and accurate information but may not have conducted destructive testing or chemical analysis on incoming materials and chemicals. TI and TI suppliers consider certain information to be proprietary, and thus CAS numbers and other limited information may not be available for release.

In no event shall TI's liability arising out of such information exceed the total purchase price of the TI part(s) at issue in this document sold by TI to Customer on an annual basis.

IMPORTANT NOTICE

Texas Instruments Incorporated and its subsidiaries (TI) reserve the right to make corrections, modifications, enhancements, improvements, and other changes to its products and services at any time and to discontinue any product or service without notice. Customers should obtain the latest relevant information before placing orders and should verify that such information is current and complete. All products are sold subject to TI's terms and conditions of sale supplied at the time of order acknowledgment.

TI warrants performance of its hardware products to the specifications applicable at the time of sale in accordance with TI's standard warranty. Testing and other quality control techniques are used to the extent TI deems necessary to support this warranty. Except where mandated by government requirements, testing of all parameters of each product is not necessarily performed.

TI assumes no liability for applications assistance or customer product design. Customers are responsible for their products and applications using TI components. To minimize the risks associated with customer products and applications, customers should provide adequate design and operating safeguards.

TI does not warrant or represent that any license, either express or implied, is granted under any TI patent right, copyright, mask work right, or other TI intellectual property right relating to any combination, machine, or process in which TI products or services are used. Information published by TI regarding third-party products or services does not constitute a license from TI to use such products or services or a warranty or endorsement thereof. Use of such information may require a license from a third party under the patents or other intellectual property of the third party, or a license from TI under the patents or other intellectual property of TI.

Reproduction of TI information in TI data books or data sheets is permissible only if reproduction is without alteration and is accompanied by all associated warranties, conditions, limitations, and notices. Reproduction of this information with alteration is an unfair and deceptive business practice. TI is not responsible or liable for such altered documentation. Information of third parties may be subject to additional restrictions.

Resale of TI products or services with statements different from or beyond the parameters stated by TI for that product or service voids all express and any implied warranties for the associated TI product or service and is an unfair and deceptive business practice. TI is not responsible or liable for any such statements.

TI products are not authorized for use in safety-critical applications (such as life support) where a failure of the TI product would reasonably be expected to cause severe personal injury or death, unless officers of the parties have executed an agreement specifically governing such use. Buyers represent that they have all necessary expertise in the safety and regulatory ramifications of their applications, and acknowledge and agree that they are solely responsible for all legal, regulatory and safety-related requirements concerning their products and any use of TI products in such safety-critical applications, notwithstanding any applications-related information or support that may be provided by TI. Further, Buyers must fully indemnify TI and its representatives against any damages arising out of the use of TI products in such safety-critical applications.

TI products are neither designed nor intended for use in military/aerospace applications or environments unless the TI products are specifically designated by TI as military-grade or "enhanced plastic." Only products designated by TI as military-grade meet military specifications. Buyers acknowledge and agree that any such use of TI products which TI has not designated as military-grade is solely at the Buyer's risk, and that they are solely responsible for compliance with all legal and regulatory requirements in connection with such use.

TI products are neither designed nor intended for use in automotive applications or environments unless the specific TI products are designated by TI as compliant with ISO/TS 16949 requirements. Buyers acknowledge and agree that, if they use any non-designated products in automotive applications, TI will not be responsible for any failure to meet such requirements.

Following are URLs where you can obtain information on other Texas Instruments products and application solutions:

Products		**Applications**	
Amplifiers	amplifier.ti.com	Audio	www.ti.com/audio
Data Converters	dataconverter.ti.com	Automotive	www.ti.com/automotive
DSP	dsp.ti.com	Broadband	www.ti.com/broadband
Clocks and Timers	www.ti.com/clocks	Digital Control	www.ti.com/digitalcontrol
Interface	interface.ti.com	Medical	www.ti.com/medical
Logic	logic.ti.com	Military	www.ti.com/military
Power Mgmt	power.ti.com	Optical Networking	www.ti.com/opticalnetwork
Microcontrollers	microcontroller.ti.com	Security	www.ti.com/security
RFID	www.ti-rfid.com	Telephony	www.ti.com/telephony
RF/IF and ZigBee® Solutions	www.ti.com/lprf	Video & Imaging	www.ti.com/video
		Wireless	www.ti.com/wireless

Mailing Address: Texas Instruments, Post Office Box 655303, Dallas, Texas 75265
Copyright © 2008, Texas Instruments Incorporated